JUMPKING

PRODUCT CATALOGUE



LUXURY TENTS

A FRAME CANVAS TENT

Glamping tent • timber A frame, canvas, glass front

STARTING PRICE

From ₹4,50,000

Tentative • taxes as applicable

A CABIN FEEL UNDER CANVAS.

Guests sit out on the front deck by the water, then step inside to a warm timber and canvas room with a proper glass door.



30 sq m LARGEST FLOOR	2 to 4 guests SLEEPS
30 to 60 days LEAD TIME	18% GST APPLICABLE

SPECIFICATIONS

Floor area	16 to 30 sq m
Ridge height	About 4 m to 5 m
Material	Laminated timber
Fixing	Steel base brackets and bolts
Fabric	Canvas, waterproof and UV treated
Front	Glass door and windows
Sides	Awning windows

03 TECHNICAL DRAWING

SIZE AND LAYOUT

6 m LENGTH	4 m WIDTH
4.5 m CENTRE HEIGHT	24 m² FOOTPRINT

A ISOMETRIC MM

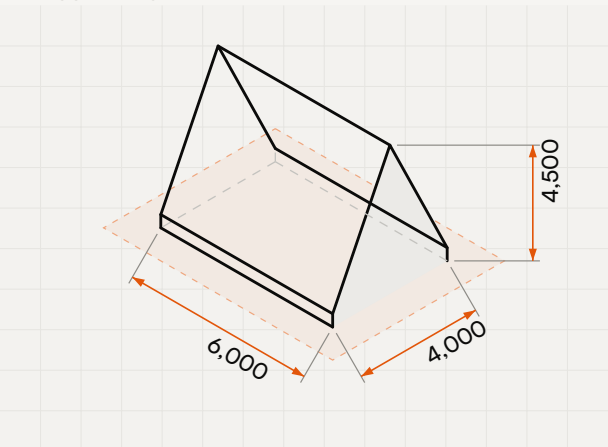

B FRONT ELEVATION MM

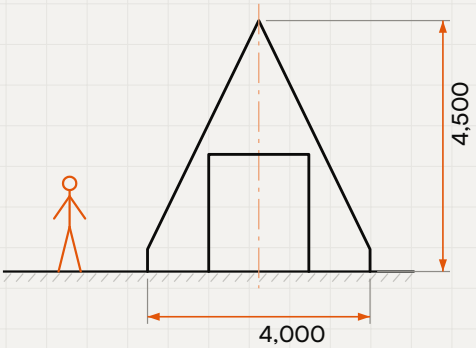

C PLAN MM

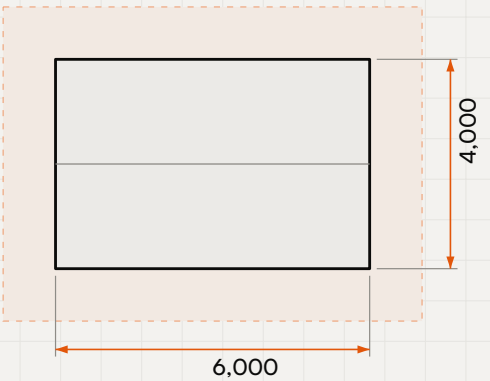

KEY DIMENSIONS

Overall size	6,000 × 4,000 mm
Centre height	4,500 mm
Eave height	400 mm
Door	1,800 × 2,100 mm
Clear zone	1,000 mm all round
Site needed	8 × 6 m, 48 m²

DRAWING	UNITS
JK-D-36993 • Rev A	mm
SCALE	**PROJECTION**
Not to scale	Third angle

Indicative drawing for planning. Sizes, materials and layout are confirmed in the written quotation.

04 FEATURES

WHY IT WORKS



01 **Timber A frame**

Strong laminated timber beams give the steep roof line and shed rain fast.

02 **Glass front**

A glazed door and window set lets in light and keeps out insects.

03 **Awning windows**

Side windows open with prop up canvas awnings for cross breeze.

04 **Raised deck**

The tent sits on its own wooden deck with a front sit out.

05 PLANNING

SITE REQUIREMENTS



Complete tent

The tent comes with timber frame, canvas cover, glazed front set and side awning windows.

SUPPLIED WITH THE ITEM



Site plan

Plan each tent on a deck with a path, a bathroom block and a fire pit area around it.

YOU AND JUMPKING



Deck and pitching

The frame is fixed on a wooden platform and the canvas is pulled over and tied down.

YOU, OR TECHNICIANS AT A QUOTED CHARGE



Frame fixings

Steel brackets bolt the timber beams to the deck and turnbuckles tension the canvas edge.

SUPPLIED WITH THE ITEM

06 COMMERCIAL

PRICE AND TERMS

STARTING PRICE

From ₹4,50,000

Tentative price for the standard configuration. The real quote is given after we understand the quality, quantity, size, materials, location, budget and current material prices.

GST	18%, extra
Installation	DIY, or by technicians at a quoted charge
Shipping	Extra, at actual
Lead time	30 to 60 days (made to order)
Warranty	As per the manufacturer's terms

Payment	As per the written quotation
Price valid	Confirmed in the quotation

07 PROCESS

HOW IT WORKS

01 **Brief**

Your site, space, audience and budget.

02 **Layout and quotation**

Size, layout, materials and price set out in a written quotation.

03 **Supply**

Made to the agreed specification and dispatched, shipping at actual.

04 **Set up and open**

Installation and staff briefing on request, quoted separately.

08 PLEASE NOTE

ABOUT OUR PRICES

Made to your brief. Most of the range, and every project item, is fully customisable: size, shape, materials, finish, capacity and features are set to your requirement.

Prices are tentative and for guidance only. They are not an offer and not a final price.

Costs move with the world. Pricing depends heavily on international raw material prices and the USD to INR exchange rate. In the present geopolitical climate, freight, labour charges, the cost of living and taxes are all changing quickly, and prices change with them.

A firm price comes in writing. JumpKing issues a binding quotation only after understanding your full requirement: size, shape, quality, safety standards, location, budget, complexity and time frame.

Taxes as applicable on the date of supply. GST and any other taxes are charged at the rates in force when the goods and services are supplied.

Supplied by specialist manufacturers. JumpKing plans, designs and delivers. Photos, drawings and specifications are indicative; warranty is as per the manufacturer's terms.

JUMPKING

09 CONTACT

TALK TO JUMPKING

Share your site, budget and timeline, and receive a written quotation with size, layout and price. Turnkey projects start at ₹2 Cr.

WHATSAPP	+91 82968 26263 · messages only
EMAIL	hello@jumpkingindia.com
OFFICE	45, Royal Enclave, Jakkur, Bangalore 560064
HOURS	Mon to Sat, 12:30 to 20:00

Scan for the live page, latest photos and price.

jumpking.in/shop/girigiri-a-shape-canvas-tent

JK-36993 · 4 NOV 2026