

GAMES

MEGAPARK 53377

Backyard water park • slide, climb wall, splash pool

STARTING PRICE

From ₹75,000

Tentative • taxes as applicable

A SUMMER WATER PARK IN YOUR OWN GARDEN.

Kids climb, slide and splash all afternoon while parents relax on the lawn nearby.



1 slide INTO SPLASH POOL	3 to 5 kids AT A TIME
3 to 7 days DISPATCH	18% GST APPLICABLE

SPECIFICATIONS

Code	53377
Slide	Curved water slide
Climb	Climbing wall with top deck
Extras	Sprayers, basketball hoop
Blower	Electric, included
Feed	Garden hose
Suits	Kids, home and villa gardens

SIZE AND LAYOUT

5.5 m LENGTH	4 m WIDTH
2.7 m HEIGHT	22 m² FOOTPRINT

A ISOMETRIC MM

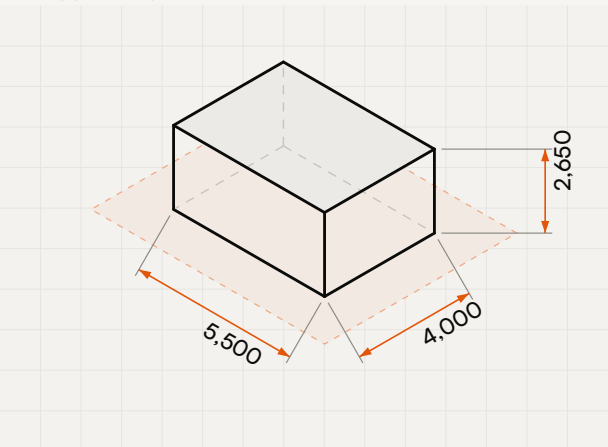

B FRONT ELEVATION

MM



C PLAN

MM

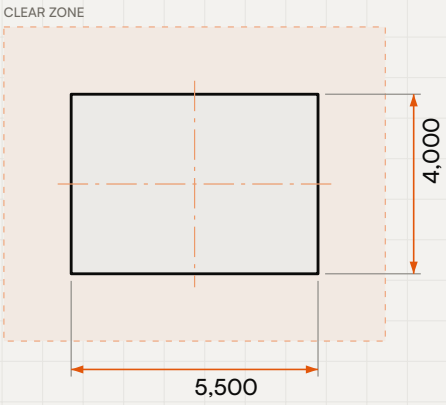

KEY DIMENSIONS

Overall size	5,500 × 4,000 mm
Height	2,650 mm
Clear zone	1,500 mm all round
Site needed	8.5 × 7 m, 60 m²

DRAWING	UNITS
JK-D-28489 • Rev A	mm
SCALE	**PROJECTION**
Not to scale	Third angle

Indicative drawing for planning. Sizes, materials and layout are confirmed in the written quotation.

WHY IT WORKS



01 **Slide and splash pool**

A curved slide drops kids into a wide splash pool.

02 **Climbing wall**

Kids climb to a shaded deck at the top of the slide.

03 **Sprayers and hoop**

Water sprayers and a basketball hoop add extra games.

04 **Blower included**

The electric blower inflates the park in minutes.

SITE REQUIREMENTS



What is in the box

The folded park with electric blower, hose adaptor, Y splitter, stakes, ropes, repair patches, glue and carry bag.

SUPPLIED WITH THE ITEM



Inflating the park

Unfold the park on the lawn, connect the blower to the inlet tube and smooth the slide as it fills.

YOU SUPPLY



Valves and hose point

The park has air valves and a brass hose connector that feeds the sprayers and slide.

YOU SUPPLY



Flat lawn and ground sheet

Lay a ground sheet on a flat lawn, with stakes, mallet, blower and hose ready.

YOU SUPPLY

PRICE AND TERMS

STARTING PRICE

From ₹75,000

Tentative price for the standard configuration. The real quote is given after we understand the quality, quantity, size, materials, location, budget and current material prices.

GST	18%, extra
Installation	DIY
Shipping	Extra, at actual
Lead time	3 to 7 days (in stock)
Warranty	As per the manufacturer's terms
Payment	As per the written quotation
Price valid	Confirmed in the quotation

07 PROCESS

HOW IT WORKS

01 **Choose**

Pick the model and quantity that suit your venue or home.

02 **Confirm**

Price, stock and delivery time confirmed in writing before you pay.

03 **Delivery**

Packed and dispatched to you, shipping at actual.

04 **Set up**

Most items are DIY with the setup guide; technicians on request, at a quoted charge.

08 PLEASE NOTE

ABOUT OUR PRICES

Made to your brief. Most of the range, and every project item, is fully customisable: size, shape, materials, finish, capacity and features are set to your requirement.

Prices are tentative and for guidance only. They are not an offer and not a final price.

Costs move with the world. Pricing depends heavily on international raw material prices and the USD to INR exchange rate. In the present geopolitical climate, freight, labour charges, the cost of living and taxes are all changing quickly, and prices change with them.

A firm price comes in writing. JumpKing issues a binding quotation only after understanding your full requirement: size, shape, quality, safety standards, location, budget, complexity and time frame.

Taxes as applicable on the date of supply. GST and any other taxes are charged at the rates in force when the goods and services are supplied.

Supplied by specialist manufacturers. JumpKing plans, designs and delivers. Photos, drawings and specifications are indicative; warranty is as per the manufacturer's terms.

09 CONTACT

TALK TO JUMPKING

Share your site, budget and timeline, and receive a written quotation with size, layout and price. Turnkey projects start at ₹2 Cr.

WHATSAPP	+91 82968 26263 · messages only
EMAIL	hello@jumpkingindia.com
OFFICE	45, Royal Enclave, Jakkur, Bangalore 560064
HOURS	Mon to Sat, 12:30 to 20:00

Scan for the live page, latest photos and price.

jumpking.in/shop/megapark-53377

JK-28489 · 4 NOV 2026