

RIDES

CAROUSEL RIDE

Merry go round with horses • 12 to 36 seats

STARTING PRICE

From ₹19,50,000

Tentative • taxes as applicable

01 OVERVIEW

THE RIDE EVERY CHILD REMEMBERS.

Lights, music and painted horses going round and round. A safe and simple ride that draws families all day.



12-36 seats BY MODEL	10 m DIAMETER, UP TO
3 min TYPICAL RIDE	18% GST APPLICABLE

02 AT A GLANCE

SPECIFICATIONS

Seats	12 to 36
Diameter	5 to 10 m
Motion	Rotation with up and down horses
Figures	FRP horses and carriages
Supply	380 V, 3 phase
Lights and sound	LED lights and music system

03 TECHNICAL DRAWING

SIZE AND LAYOUT

7.5 m

DIAMETER

5.5 m

HEIGHT

44 m^2

FOOTPRINT

A ISOMETRIC MM

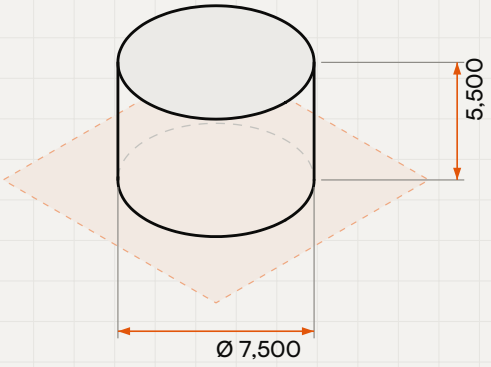

B FRONT ELEVATION MM

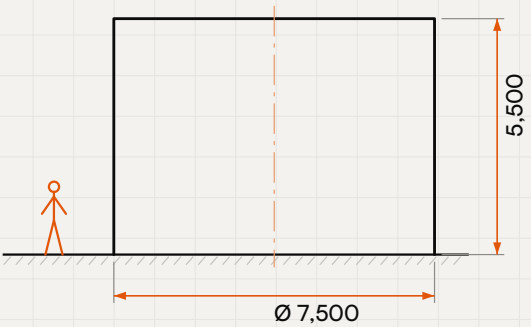

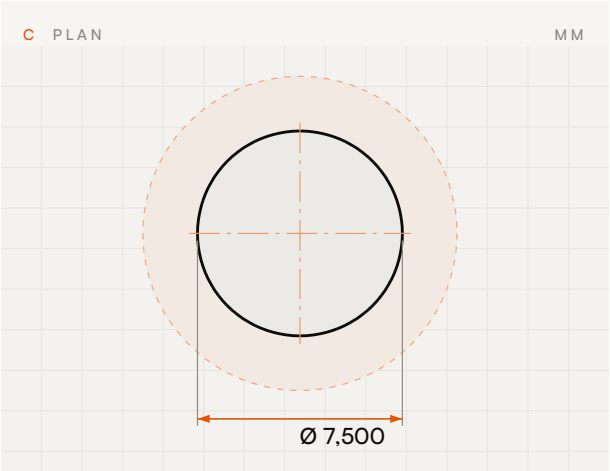

KEY DIMENSIONS

Diameter	7,500 mm
Height	5,500 mm
Floor area	44 m²
Clear zone	2,000 mm all round
Site needed	12 × 12 m, 132 m²

DRAWING	UNITS
JK-D-33473 • Rev A	mm
SCALE	**PROJECTION**
Not to scale	Third angle

Indicative drawing for planning. Sizes, materials and layout are confirmed in the written quotation.

04 FEATURES

WHY IT WORKS



01 **Classic look**

Painted horses, mirrors and LED lights under a themed canopy.

02 **For all ages**

Kids ride alone or with parents in the carriages.

03 **Gentle motion**

Slow turn and soft up and down movement.

04 **Low running cost**

Small motor load and simple daily checks.

05 PLANNING

SITE REQUIREMENTS

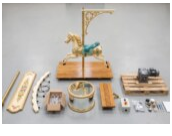

What we supply

Carousel platform, canopy, horses, drive, lights, music and control box.

JUMPKING



Site survey

Level ground or floor with space for the queue and fence.

YOU SUPPLY



Installation

Base fixing, assembly, wiring and test runs on site.

YOU, OR TECHNICIANS AT A QUOTED CHARGE



Operations and maintenance

Daily checks, greasing and safe loading by trained operators.

TRAINING BY SPECIALISTS, QUOTED

06 COMMERCIAL

PRICE AND TERMS

STARTING PRICE

From ₹19,50,000

Tentative price for the standard configuration. The real quote is given after we understand the quality, quantity, size, materials, location, budget and current material prices.

GST	18%, extra
Installation	By technicians, quoted per project
Shipping	Extra, at actual

Lead time	45 to 60 days
Warranty	As per the manufacturer's terms
Payment	As per the written quotation
Price valid	Confirmed in the quotation

07 PROCESS

HOW IT WORKS

01 **Brief**

Venue, footfall and the riders you expect.

02 **Quote**

Model, size, branding and controls confirmed.

03 **Supply**

Tested, packed and shipped at actual.

04 **Set up and train**

Many venues set up themselves with the setup guide; installation and operator training by technicians are quoted separately.

08 PLEASE NOTE

ABOUT OUR PRICES

Made to your brief. Most of the range, and every project item, is fully customisable: size, shape, materials, finish, capacity and features are set to your requirement.

Prices are tentative and for guidance only. They are not an offer and not a final price.

Costs move with the world. Pricing depends heavily on international raw material prices and the USD to INR exchange rate. In the present geopolitical climate, freight, labour charges, the cost of living and taxes are all changing quickly, and prices change with them.

A firm price comes in writing. JumpKing issues a binding quotation only after understanding your full requirement: size, shape, quality, safety standards, location, budget, complexity and time frame.

Taxes as applicable on the date of supply. GST and any other taxes are charged at the rates in force when the goods and services are supplied.

Supplied by specialist manufacturers. JumpKing plans, designs and delivers. Photos, drawings and specifications are indicative; warranty is as per the manufacturer's terms.

JUMPKING

09 CONTACT

TALK TO JUMPKING

Share your site, budget and timeline, and receive a written quotation with size, layout and price. Turnkey projects start at ₹2 Cr.

WHATSAPP	+91 82968 26263 · messages only
EMAIL	hello@jumpkingindia.com
OFFICE	45, Royal Enclave, Jakkur, Bangalore 560064
HOURS	Mon to Sat, 12:30 to 20:00

Scan for the live page, latest photos and price.

jumpking.in/shop/carousel

JK-33473 · 4 NOV 2026