









POOLS

BESTWAY 56462

Steel Pro Max round pool • 17.8 x 17.8 x 4 ft

STARTING PRICE

₹1,68,000

Tentative • taxes as applicable

01 OVERVIEW

BESTWAY 56462



02 AT A GLANCE

SPECIFICATIONS

Height	4.00
Length	17.8
Width	17.8
Capacity	23062
Capacity	6-8 Person, Family of 4

Space	19.3 X 19.3
Weight	85.6
Model	56462
Brand	Bestway
Quality	Steel Pro Max
Shape	Round
Add-ons	Cartridge Filter, Cover, Ladder
Life	3-4

03 TECHNICAL DRAWING

SIZE AND LAYOUT

5.4 m

DIAMETER

1.2 m

HEIGHT

23 m^2

FOOTPRINT

A ISOMETRIC MM

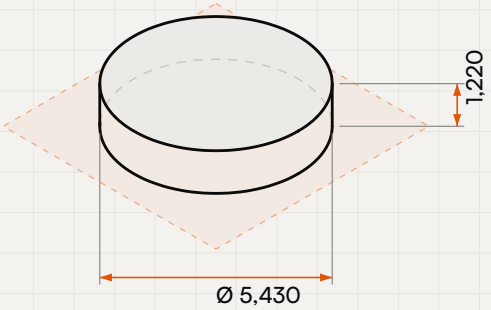

B FRONT ELEVATION MM



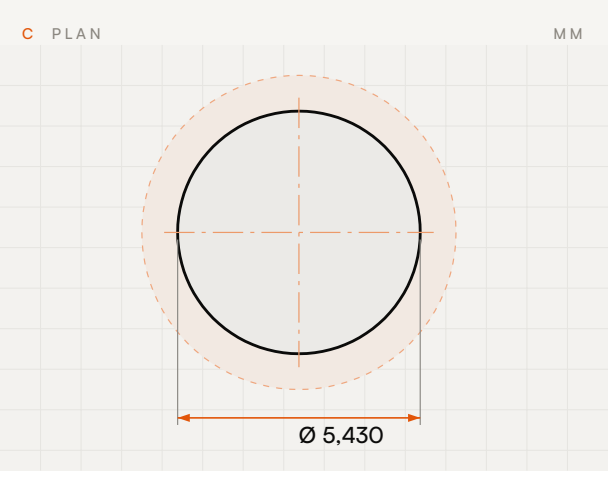

KEY DIMENSIONS

Diameter	5,430 mm
Height	1,220 mm
Floor area	23 m²
Clear zone	800 mm all round
Site needed	7 × 7 m, 49 m²

DRAWING	UNITS
JK-D-28480 • Rev A	mm
SCALE	**PROJECTION**
Not to scale	Third angle

Indicative drawing for planning. Sizes, materials and layout are confirmed in the written quotation.

04 FEATURES

WHY IT WORKS



01 **4.00**

Height

02 17.8

Length

03 17.8

Width

04 23062

Capacity

05 6-8 Person, Family of 4

Capacity

06 19.3 X 19.3

Space

05 PLANNING

SITE REQUIREMENTS

Land and site

Level, drained ground with clear access for delivery and lifting.

YOU SUPPLY

Approvals

Local permissions, NOCs and any tourism or safety registration the site needs.

YOU SUPPLY

Civil and power

Foundations, flooring and a dedicated power supply, built to our drawings.

YOU SUPPLY

Trained operators

Staff on the activity at all times, trained by us at handover.

JUMPKING TRAINS

06 COMMERCIAL

PRICE AND TERMS

STARTING PRICE

₹1,68,000

Price for the model shown, subject to stock and current rates. GST extra, shipping at actual.

GST	18%, extra

Warranty	As per the manufacturer's terms
Payment	As per the written quotation
Price valid	Confirmed in the quotation

07 PROCESS

HOW IT WORKS

01 **Site and brief assessment**

We review your site plan, audience, budget and local rules, then settle the configuration.

02 **Specification and quotation**

We set the specification for every unit and prepare the quotation, with the options laid side by side.

03 **Technical review**

We go through the proposal with you, advise on certification, and flag structural and safety points.

04 **Supply and installation**

Supply, shipping and installation run to the agreed plan, with JumpKing as your point of contact throughout.

08 PLEASE NOTE

ABOUT OUR PRICES

Made to your brief. Most of the range, and every project item, is fully customisable: size, shape, materials, finish, capacity and features are set to your requirement.

Prices are tentative and for guidance only. They are not an offer and not a final price.

Costs move with the world. Pricing depends heavily on international raw material prices and the USD to INR exchange rate. In the present geopolitical climate, freight, labour charges, the cost of living and taxes are all changing quickly, and prices change with them.

A firm price comes in writing. JumpKing issues a binding quotation only after understanding your full requirement: size, shape, quality, safety standards, location, budget, complexity and time frame.

Taxes as applicable on the date of supply. GST and any other taxes are charged at the rates in force when the goods and services are supplied.

Supplied by specialist manufacturers. JumpKing plans, designs and delivers. Photos, drawings and specifications are indicative; warranty is as per the manufacturer's terms.

JUMPKING

09 CONTACT

TALK TO JUMPKING

Share your site, budget and timeline, and receive a written quotation with size, layout and price.

WHATSAPP	+91 82968 26263 · messages only
EMAIL	hello@jumpkingindia.com
OFFICE	45, Royal Enclave, Jakkur, Bangalore 560064
HOURS	Mon to Sat, 12:30 to 20:00

Scan for the live page, latest photos and price.
jumpking.in/shop/bestway-56462-size-17-8-x-17-8-x-4-00-ft-steel-pro-max-round-metal-frame-portable-ready-made-swimming-pool

JK-28480 · 4 NOV 2026