











POOLS

BESTWAY 56725

Vista Series round pool • 16 x 16 x 4 ft

STARTING PRICE

₹61,525

Tentative • taxes as applicable

01 OVERVIEW

BESTWAY 56725



02 AT A GLANCE

SPECIFICATIONS

Capacity	19480
Model	56725
Quality	Vista Series

SIZE AND LAYOUT

4.9 m

DIAMETER

1.2 m

HEIGHT

19 m²

FOOTPRINT

A ISOMETRIC

MM

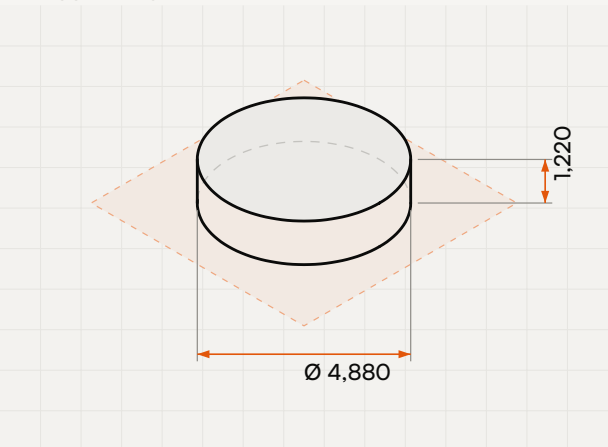

B FRONT ELEVATION

MM



C PLAN

MM

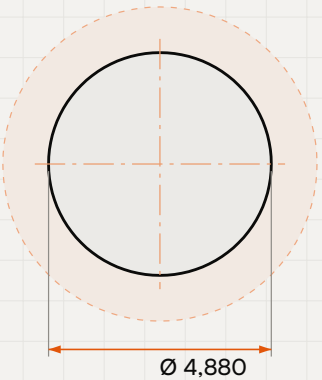

KEY DIMENSIONS

Diameter	4,880 mm
Height	1,220 mm
Floor area	19 m^2
Clear zone	1,000 mm all round
Site needed	6.9 × 6.9 m, 47 m^2

DRAWING	UNITS
JK-D-28485 • Rev A	mm
SCALE	**PROJECTION**
Not to scale	Third angle

Indicative drawing for planning. Sizes, materials and layout are confirmed in the written quotation.

SITE REQUIREMENTS

Land and site

Level, drained ground with clear access for delivery and lifting.

YOU SUPPLY

Approvals

Local permissions, NOCs and any tourism or safety registration the site needs.

YOU SUPPLY

Civil and power

Foundations, flooring and a dedicated power supply, built to our drawings.

YOU SUPPLY

Trained operators

Staff on the activity at all times, trained by us at handover.

JUMPKING TRAINS

05 COMMERCIAL

PRICE AND TERMS

STARTING PRICE

₹61,525

Price for the model shown, subject to stock and current rates. GST extra, shipping at actual.

GST	18%, extra
Warranty	As per the manufacturer's terms
Payment	As per the written quotation
Price valid	Confirmed in the quotation

06 PROCESS

HOW IT WORKS

01 **Site and brief assessment**

We review your site plan, audience, budget and local rules, then settle the configuration.

02 **Specification and quotation**

We set the specification for every unit and prepare the quotation, with the options laid side by side.

03 **Technical review**

We go through the proposal with you, advise on certification, and flag structural and safety points.

04 **Supply and installation**

Supply, shipping and installation run to the agreed plan, with JumpKing as your point of contact throughout.

07 PLEASE NOTE

ABOUT OUR PRICES

Made to your brief. Most of the range, and every project item, is fully customisable: size, shape, materials, finish, capacity and features are set to your requirement.

Prices are tentative and for guidance only. They are not an offer and not a final price.

Costs move with the world. Pricing depends heavily on international raw material prices and the USD to INR exchange rate. In the present geopolitical climate, freight, labour charges, the cost of living and taxes are all changing quickly, and prices change with them.

A firm price comes in writing. JumpKing issues a binding quotation only after understanding your full requirement: size, shape, quality, safety standards, location, budget, complexity and time frame.

Taxes as applicable on the date of supply. GST and any other taxes are charged at the rates in force when the goods and services are supplied.

Supplied by specialist manufacturers. JumpKing plans, designs and delivers. Photos, drawings and specifications are indicative; warranty is as per the manufacturer's terms.

JUMPKING

08 CONTACT

TALK TO JUMPKING

Share your site, budget and timeline, and receive a written quotation with size, layout and price.

WHATSAPP	+91 82968 26263 · messages only
EMAIL	hello@jumpkingindia.com
OFFICE	45, Royal Enclave, Jakkur, Bangalore 560064
HOURS	Mon to Sat, 12:30 to 20:00

Scan for the live page, latest photos and price.
jumpking.in/shop/bestway-56725-size-16-0-x-16-0-x-4-00-ft-power-steel-vista-series-round-metal-frame-portable-ready-made-swimming-pool

JK-28485 · 4 NOV 2026