

ATTRACTIONS

UNDERWATER RESTAURANT

Acrylic dome dining under the sea • mega project

STARTING PRICE

From ₹45,00,00,000

Tentative • taxes as applicable

DINNER WITH THE FISH.

A clear dome under the sea turns every meal into a story your guests will tell for years.



16-40 covers SEATING	6 m DEPTH, UP TO
100 mm+ ACRYLIC	18% GST APPLICABLE

02 AT A GLANCE

SPECIFICATIONS

Build	Marine steel or RCC
Acrylic	Cast acrylic, 100 mm+
Seating	16 to 40 covers
Depth	4 to 6 m
Air	AC, fresh air, backup power
Exit	Emergency exit route and alarms

03 TECHNICAL DRAWING

SIZE AND LAYOUT

16 m LENGTH	6 m WIDTH
4.5 m HEIGHT	96 m^2 FOOTPRINT

A ISOMETRIC MM

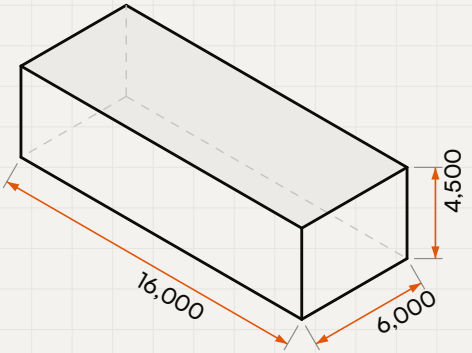

B FRONT ELEVATION MM

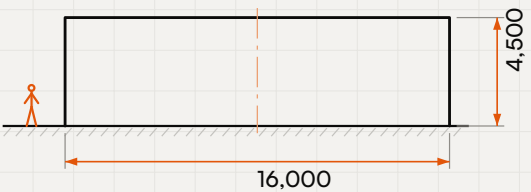

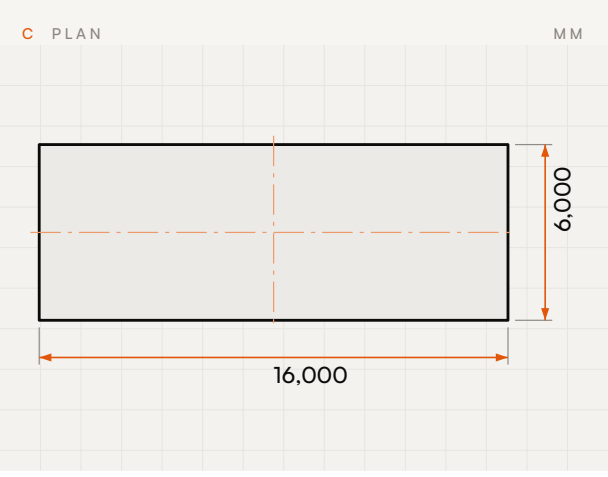

KEY DIMENSIONS

Overall size	16,000 × 6,000 mm
Height	4,500 mm

DRAWING	UNITS
JK-D-33532 • Rev A	mm
SCALE	**PROJECTION**
Not to scale	Third angle

Indicative drawing for planning. Sizes, materials and layout are confirmed in the written quotation.

WHY IT WORKS



01 **Clear acrylic dome**

Full view of sea life from every table.

02 **Marine engineering**

Hull and anchors designed for the site.

03 **Life and air systems**

AC, fresh air and emergency systems.

04 **Approvals support**

Drawings for coastal and safety approvals.

SITE REQUIREMENTS

Calm, clear site

A sheltered coast or large tank with clear water and steady sea bed.

YOU SUPPLY

Approvals

Coastal, marine and building approvals for the project.

YOU SUPPLY

Hull and jetty

Hull fabrication, placing on site, anchoring and access jetty.

YOU AND JUMPKING

Staff training

Your team learns daily checks, emergency drills and systems.

TRAINING BY SPECIALISTS, QUOTED

PRICE AND TERMS

STARTING PRICE

From ₹45,00,00,000

Tentative price for the standard configuration. The real quote is given after we understand the quality, quantity, size, materials, location, budget and current material prices.

GST	18%, extra
Installation	By technicians, quoted per project
Shipping	Extra, at actual
Lead time	18 to 30 months
Warranty	As per the manufacturer's terms
Payment	As per the written quotation
Price valid	Confirmed in the quotation

07 PROCESS

HOW IT WORKS

01 **Concept**

Footfall, ticket price, space and theme agreed with you.

02 **Design and quote**

Layout, story, fit-out and budget fixed in a detailed proposal.

03 **Build and fit-out**

Civil works by your contractor; exhibits, systems and theming by specialist technicians, quoted per project.

04 **Open and run**

Staff training, safety checks and a soft opening before launch.

08 PLEASE NOTE

ABOUT OUR PRICES

Made to your brief. Most of the range, and every project item, is fully customisable: size, shape, materials, finish, capacity and features are set to your requirement.

Prices are tentative and for guidance only. They are not an offer and not a final price.

Costs move with the world. Pricing depends heavily on international raw material prices and the USD to INR exchange rate. In the present geopolitical climate, freight, labour charges, the cost of living and taxes are all changing quickly, and prices change with them.

A firm price comes in writing. JumpKing issues a binding quotation only after understanding your full requirement: size, shape, quality, safety standards, location, budget, complexity and time frame.

Taxes as applicable on the date of supply. GST and any other taxes are charged at the rates in force when the goods and services are supplied.

Supplied by specialist manufacturers. JumpKing plans, designs and delivers. Photos, drawings and specifications are indicative; warranty is as per the manufacturer's terms.

JUMPKING

09 CONTACT

TALK TO JUMPKING

Share your site, budget and timeline, and receive a written quotation with size, layout and price. Turnkey projects start at ₹2 Cr.

WHATSAPP	+91 82968 26263 · messages only
EMAIL	hello@jumpkingindia.com
OFFICE	45, Royal Enclave, Jakkur, Bangalore 560064
HOURS	Mon to Sat, 12:30 to 20:00

Scan for the live page, latest photos and price.

jumpking.in/shop/underwater-restaurant

JK-33532 · 4 NOV 2026