JUMPKING

PRODUCT CATALOGUE



LUXURY TENTS

SKY LODGE CAPSULE

Cliff hung glass capsule • bed, roof hatch, views

STARTING PRICE

From ₹38,00,000

Tentative • taxes as applicable

01 OVERVIEW

A NIGHT HANGING ON THE SIDE OF A MOUNTAIN.

Guests climb to their capsule, then fall asleep with a gorge and river hundreds of metres below the glass.



7 m TYPICAL LENGTH	2 guests PER CAPSULE
90 to 150 days LEAD TIME	18% GST APPLICABLE

SPECIFICATIONS

Body	Steel, faceted
Glazing	Large glass panels
Length	Approx. 7 m
Height	Approx. 2.4 m
Below	Steel struts to rock
Above	Steel cables to rock anchors
Guests	Fixed rope route

03 TECHNICAL DRAWING

SIZE AND LAYOUT

7 m LENGTH	2.4 m WIDTH
2.4 m HEIGHT	17 m² FOOTPRINT

A ISOMETRIC MM

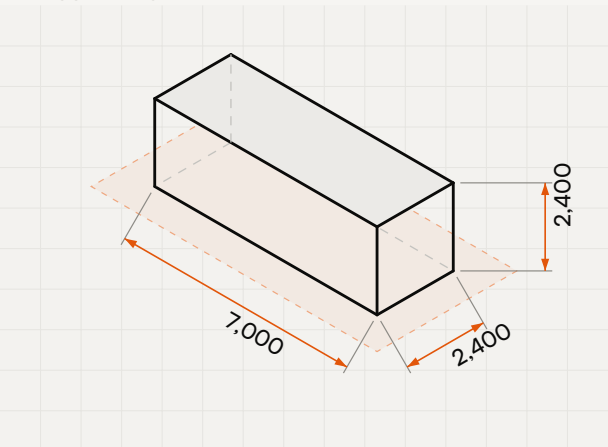

B FRONT ELEVATION MM



C PLAN MM

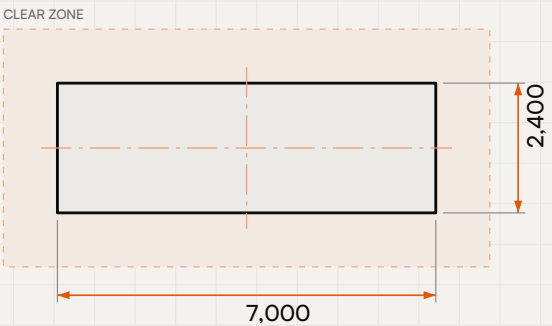

KEY DIMENSIONS

Overall size	7,000 × 2,400 mm
Height	2,400 mm
Clear zone	1,000 mm all round
Site needed	9 × 4.4 m, 40 m²

DRAWING	UNITS
JK-D-37294 • Rev A	mm
SCALE	**PROJECTION**
Not to scale	Third angle

Indicative drawing for planning. Sizes, materials and layout are confirmed in the written quotation.

04 FEATURES

WHY IT WORKS



01 **Cliff mounted**

Hung on the rock face for views no other room can give.

02 **Steel and glass shell**

A faceted steel body with large glass panels on most sides.

03 **Rock anchored**

Bolted plates, struts and cables tie the capsule to the cliff.

04 **Surveyed per site**

Each install starts with a rock and access survey.

SITE REQUIREMENTS



The capsule

The capsule as supplied: steel and glass shell with bed inside, roof hatch, struts and cable points.

SUPPLIED WITH THE ITEM



Cliff layout

A drawing of the capsule on the rock face with struts, cables, top anchors and the rope access route.

YOU AND JUMPKING



Rope access fitting

Rope access technicians hang and bolt the capsule while working on the cliff face.

YOU, OR TECHNICIANS AT A QUOTED CHARGE



Rock anchors

Steel plates bolted into the rock hold the struts and cable turnbuckles.

YOU AND JUMPKING

06 COMMERCIAL

PRICE AND TERMS

STARTING PRICE

From ₹38,00,000

Tentative price for the standard configuration. The real quote is given after we understand the quality, quantity, size, materials, location, budget and current material prices.

GST	18%, extra
Installation	By technicians, quoted per project
Shipping	Extra, at actual
Lead time	90 to 150 days (made to order)
Warranty	As per the manufacturer's terms
Payment	As per the written quotation
Price valid	Confirmed in the quotation

07 PROCESS

HOW IT WORKS

01 **Brief**

Your site, space, audience and budget.

02 **Layout and quotation**

Size, layout, materials and price set out in a written quotation.

03 **Supply**

Made to the agreed specification and dispatched, shipping at actual.

04 **Set up and open**

Installation and staff briefing on request, quoted separately.

08 PLEASE NOTE

ABOUT OUR PRICES

Made to your brief. Most of the range, and every project item, is fully customisable: size, shape, materials, finish, capacity and features are set to your requirement.

Prices are tentative and for guidance only. They are not an offer and not a final price.

Costs move with the world. Pricing depends heavily on international raw material prices and the USD to INR exchange rate. In the present geopolitical climate, freight, labour charges, the cost of living and taxes are all changing quickly, and prices change with them.

A firm price comes in writing. JumpKing issues a binding quotation only after understanding your full requirement: size, shape, quality, safety standards, location, budget, complexity and time frame.

Taxes as applicable on the date of supply. GST and any other taxes are charged at the rates in force when the goods and services are supplied.

Supplied by specialist manufacturers. JumpKing plans, designs and delivers. Photos, drawings and specifications are indicative; warranty is as per the manufacturer's terms.

JUMPKING

09 CONTACT

TALK TO JUMPKING

Share your site, budget and timeline, and receive a written quotation with size, layout and price. Turnkey projects start at ₹2 Cr.

WHATSAPP	+91 82968 26263 · messages only
EMAIL	hello@jumpkingindia.com
OFFICE	45, Royal Enclave, Jakkur, Bangalore 560064
HOURS	Mon to Sat, 12:30 to 20:00

Scan for the live page, latest photos and price.

jumpking.in/shop/sky-lodge-cliffside-capsule

JK-37294 · 4 NOV 2026