

GAMES

SPLASH COURSE PARK

Kids water park • double slide and splash pool

STARTING PRICE

From ₹85,000

Tentative • taxes as applicable

01 OVERVIEW

A WATER PARK IN THE BACK GARDEN.

Kids climb the tower, race down the twin slides into the pool and play ball under the arch all afternoon while parents relax nearby.



7.1 m LENGTH APPROX	2 lanes SLIDE
3 to 7 days DELIVERY	18% GST APPLICABLE

02 AT A GLANCE

SPECIFICATIONS

Inflated	About 7.1 x 3.1 x 2.65 m
Slide	Double lane with sprayer
Pool	Splash pool with soft walls
Blower	Electric blower included
Also included	Stakes, ropes, repair patches, ball, bag
Water	Garden hose connection

03 TECHNICAL DRAWING

SIZE AND LAYOUT

7.1 m LENGTH	3.1 m WIDTH
2.7 m HEIGHT	22 m^2 FOOTPRINT

A ISOMETRIC MM

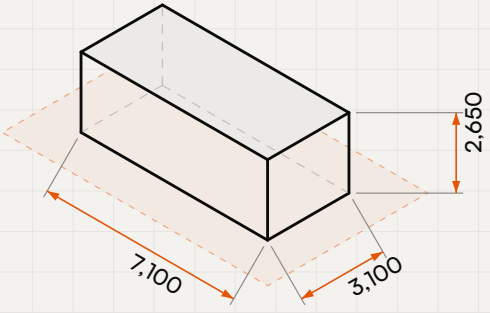

B FRONT ELEVATION MM

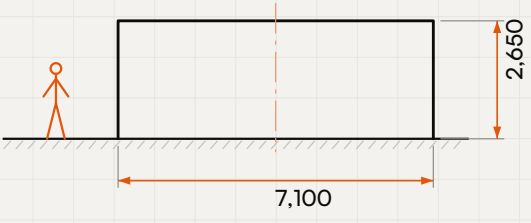

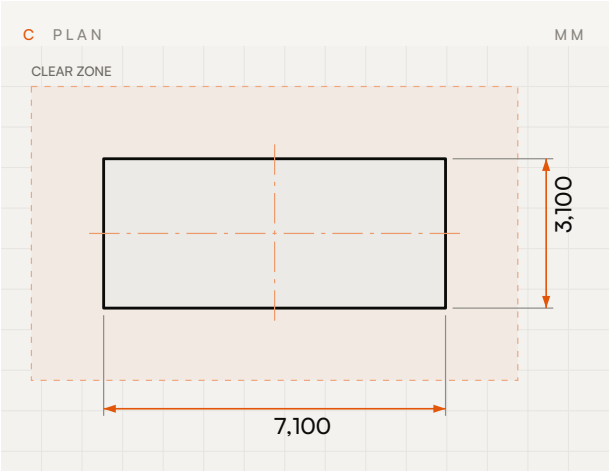

KEY DIMENSIONS

Overall size	7,100 × 3,100 mm
Height	2,650 mm
Clear zone	1,500 mm all round
Site needed	10 × 6.1 m, 62 m²

DRAWING	UNITS
JK-D-28493 • Rev A	mm
SCALE	**PROJECTION**
Not to scale	Third angle

Indicative drawing for planning. Sizes, materials and layout are confirmed in the written quotation.

04 FEATURES

WHY IT WORKS



01 **Twin wet slide**

Two lanes let kids race each other into the splash pool.

02 **Quick to inflate**

The supplied blower puts it up in a few minutes.

03 **Room for friends**

Several kids can play across the tower, slide and pool.

04 **Packs into a bag**

Deflates and folds into its own storage bag.

05 PLANNING

SITE REQUIREMENTS



What comes in the box

Folded water park, electric blower with cable, hose adapter and splitter, stakes, ropes, repair patches, beach ball and storage bag.

SUPPLIED WITH THE ITEM



Two adults to set up

Two adults unroll the park and run the blower into the inlet tube until the slide and walls stand firm.

YOU SUPPLY



Valves and hose inlet

The air inlet, deflation valve and brass garden hose connector sit on the side wall for filling air and water.

SUPPLIED WITH THE ITEM



Flat lawn and hose

A flat lawn cleared of stones with a ground sheet, a garden hose and a power point near the blower.

YOU SUPPLY

06 COMMERCIAL

PRICE AND TERMS

STARTING PRICE

From ₹85,000

Tentative price for the standard configuration. The real quote is given after we understand the quality, quantity, size, materials, location, budget and current material prices.

GST	18%, extra
Installation	DIY

Shipping	Extra, at actual
Lead time	3 to 7 days (in stock)
Warranty	As per the manufacturer's terms
Payment	As per the written quotation
Price valid	Confirmed in the quotation

07 PROCESS

HOW IT WORKS

01 **Choose**

Pick the model and quantity that suit your venue or home.

02 **Confirm**

Price, stock and delivery time confirmed in writing before you pay.

03 **Delivery**

Packed and dispatched to you, shipping at actual.

04 **Set up**

Most items are DIY with the setup guide; technicians on request, at a quoted charge.

08 PLEASE NOTE

ABOUT OUR PRICES

Made to your brief. Most of the range, and every project item, is fully customisable: size, shape, materials, finish, capacity and features are set to your requirement.

Prices are tentative and for guidance only. They are not an offer and not a final price.

Costs move with the world. Pricing depends heavily on international raw material prices and the USD to INR exchange rate. In the present geopolitical climate, freight, labour charges, the cost of living and taxes are all changing quickly, and prices change with them.

A firm price comes in writing. JumpKing issues a binding quotation only after understanding your full requirement: size, shape, quality, safety standards, location, budget, complexity and time frame.

Taxes as applicable on the date of supply. GST and any other taxes are charged at the rates in force when the goods and services are supplied.

Supplied by specialist manufacturers. JumpKing plans, designs and delivers. Photos, drawings and specifications are indicative; warranty is as per the manufacturer's terms.

JUMPKING

09 CONTACT

TALK TO JUMPKING

Share your site, budget and timeline, and receive a written quotation with size, layout and price. Turnkey projects start at ₹2 Cr.

WHATSAPP	+91 82968 26263 · messages only
EMAIL	hello@jumpkingindia.com
OFFICE	45, Royal Enclave, Jakkur, Bangalore 560064
HOURS	Mon to Sat, 12:30 to 20:00

Scan for the live page, latest photos and price.

jumpking.in/shop/splash-park-53387

JK-28493 · 4 NOV 2026