

BOATS

TOWABLE TUBES

Towed ride tube • 1 to 3 riders

STARTING PRICE

From ₹72,000

Tentative • taxes as applicable

HOLD ON AND BOUNCE.

The boat swings wide, the tube skids across the wake and everyone screams with joy.



1-3 riders PER TUBE	10 min TYPICAL RIDE
40+ hp TOW BOAT, TYPICAL	18% GST APPLICABLE

02 AT A GLANCE

SPECIFICATIONS

Cover	Heavy duty nylon
Bladder	PVC
Riders	1 to 3
Towing	Speed boat, 40 hp or more
Handles	Padded, knuckle guards
Riders	Life jackets, spotter

03 TECHNICAL DRAWING

SIZE AND LAYOUT

1.8 m

DIAMETER

0.5 m

HEIGHT

2.5 m^2

FOOTPRINT

A ISOMETRIC MM

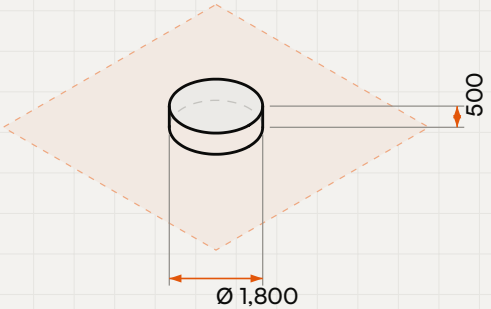

B FRONT ELEVATION MM

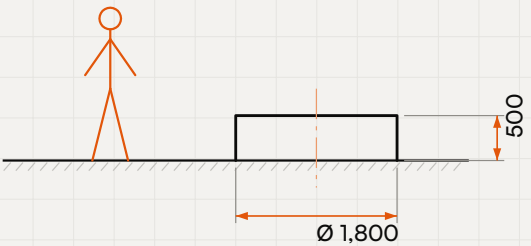

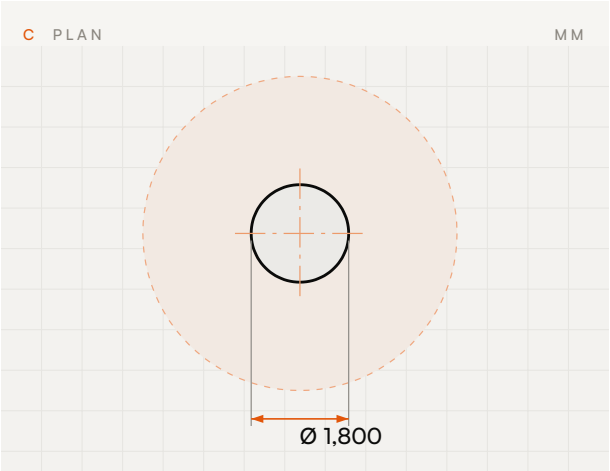

KEY DIMENSIONS

Diameter	1,800 mm
Height	500 mm
Floor area	2.5 m²
Clear zone	2,000 mm all round
Site needed	5.8 × 5.8 m, 34 m²

DRAWING	UNITS
JK-D-32882 • Rev A	mm
SCALE	**PROJECTION**
Not to scale	Third angle

Indicative drawing for planning. Sizes, materials and layout are confirmed in the written quotation.

04 FEATURES

WHY IT WORKS



01 **1 to 3 riders**

Ride solo or with friends.

02 **Nylon cover**

Tough cover protects the bladder.

03 **Bumps and spray**

Big fun over the boat wake.

04 **Easy to store**

Deflates and folds small.

05 PLANNING

SITE REQUIREMENTS



Launch and tow boat

Open water and a speed boat with a tow rope.

YOU SUPPLY

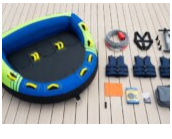

What is supplied

The towable tube with cover and tow point.

JUMPKING



Inflation check

Inflate firm and check cover, handles and tow point.

YOU SUPPLY



Skipper and spotter training

Your crew learn safe speeds, turns and signals.

TRAINING BY SPECIALISTS, QUOTED

06 COMMERCIAL

PRICE AND TERMS

STARTING PRICE

From ₹72,000

Tentative price for the standard configuration. The real quote is given after we understand the quality, quantity, size, materials, location, budget and current material prices.

GST	18%, extra
Installation	DIY
Shipping	Extra, at actual
Lead time	7 to 20 days
Warranty	As per the manufacturer's terms
Payment	As per the written quotation

07 PROCESS

HOW IT WORKS

01 **Water survey**

Depth, bed, currents and access checked with you.

02 **Layout and quote**

Models, quantities and safety zone planned for your water.

03 **Supply**

Made to the agreed specification and shipped at actual.

04 **Launch and open**

Anchoring, assembly and lifeguard briefing by your team or by technicians; their work is quoted separately.

08 PLEASE NOTE

ABOUT OUR PRICES

Made to your brief. Most of the range, and every project item, is fully customisable: size, shape, materials, finish, capacity and features are set to your requirement.

Prices are tentative and for guidance only. They are not an offer and not a final price.

Costs move with the world. Pricing depends heavily on international raw material prices and the USD to INR exchange rate. In the present geopolitical climate, freight, labour charges, the cost of living and taxes are all changing quickly, and prices change with them.

A firm price comes in writing. JumpKing issues a binding quotation only after understanding your full requirement: size, shape, quality, safety standards, location, budget, complexity and time frame.

Taxes as applicable on the date of supply. GST and any other taxes are charged at the rates in force when the goods and services are supplied.

Supplied by specialist manufacturers. JumpKing plans, designs and delivers. Photos, drawings and specifications are indicative; warranty is as per the manufacturer's terms.

JUMPKING

09 CONTACT

TALK TO JUMPKING

Share your site, budget and timeline, and receive a written quotation with size, layout and price. Turnkey projects start at ₹2 Cr.

WHATSAPP	+91 82968 26263 · messages only
EMAIL	hello@jumpkingindia.com
OFFICE	45, Royal Enclave, Jakkur, Bangalore 560064
HOURS	Mon to Sat, 12:30 to 20:00

Scan for the live page, latest photos and price.

jumpking.in/shop/towable-tubes

JK-32882 · 4 NOV 2026