JUMPKING

PRODUCT CATALOGUE



ATTRACTIONS

TUNNEL AQUARIUM

Acrylic underwater tunnel • turnkey project

STARTING PRICE

From ₹14,00,00,000

Tentative • taxes as applicable

WALK UNDER THE OCEAN.

Sharks overhead, rays gliding past, and a clear tunnel that puts every visitor inside the sea.



60 m TUNNEL, UP TO	5M litres MAIN TANK, UP TO
1,500 pax/hr UP TO	18% GST APPLICABLE

SPECIFICATIONS

Length	20 to 60 m
Acrylic	Cast acrylic, 60 to 120 mm
Volume	1 to 5 million litres
Life support	Sand filters, skimmers, UV, chillers
Area	2,000 to 6,000 sq m
Load	300 to 800 kW (typical)
Decor	Artificial rock and coral, LED lighting

03 TECHNICAL DRAWING

SIZE AND LAYOUT

40 m LENGTH	3 m WIDTH
2.8 m HEIGHT	120 m² FOOTPRINT

A ISOMETRIC MM

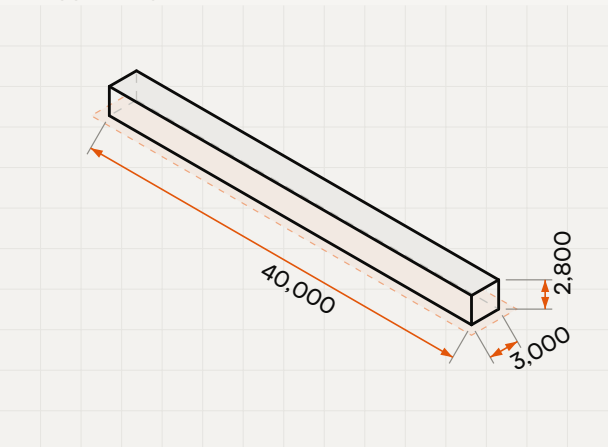

B FRONT ELEVATION MM

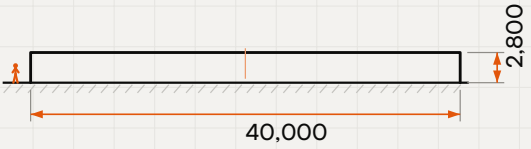

C PLAN MM

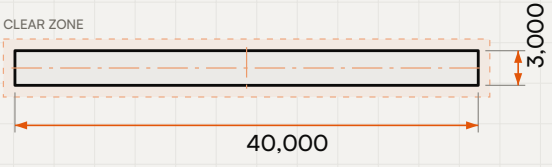

KEY DIMENSIONS

Overall size	40,000 × 3,000 mm
Height	2,800 mm
Clear zone	1,000 mm all round
Site needed	42 × 5 m, 210 m²

DRAWING	UNITS
JK-D-33530 • Rev A	mm
SCALE	**PROJECTION**
Not to scale	Third angle

Indicative drawing for planning. Sizes, materials and layout are confirmed in the written quotation.

04 FEATURES

WHY IT WORKS



01 **Acrylic tunnel**

Clear curved panels with a full overhead view.

02 **Life support system**

Filters, chillers and UV keep the water healthy.

03 **Turnkey planning**

Tank design, theming and fit-out under one plan.

04 **Aquarist support**

Training for your aquarists, quoted separately.

SITE REQUIREMENTS



Acrylic and LSS kit

Tunnel panels, pumps, filters, chillers, pipes and controls.

JUMPKING



Building and tanks

RCC tanks, plant room, drainage and power to our drawings.

YOU SUPPLY



Tunnel and plant fit-out

Acrylic lifting and bonding, then plant room piping and testing.

YOU AND JUMPKING



Aquarist training

Your team learns water testing, plant running and animal care.

TRAINING BY SPECIALISTS, QUOTED

PRICE AND TERMS

STARTING PRICE

From ₹14,00,00,000

Tentative price for the standard configuration. The real quote is given after we understand the quality, quantity, size, materials, location, budget and current material prices.

GST	18%, extra
Installation	By technicians, quoted per project
Shipping	Extra, at actual
Lead time	12 to 24 months
Warranty	As per the manufacturer's terms
Payment	As per the written quotation
Price valid	Confirmed in the quotation

07 PROCESS

HOW IT WORKS

01 **Concept**

Footfall, ticket price, space and theme agreed with you.

02 **Design and quote**

Layout, story, fit-out and budget fixed in a detailed proposal.

03 **Build and fit-out**

Civil works by your contractor; exhibits, systems and theming by specialist technicians, quoted per project.

04 **Open and run**

Staff training, safety checks and a soft opening before launch.

08 PLEASE NOTE

ABOUT OUR PRICES

Made to your brief. Most of the range, and every project item, is fully customisable: size, shape, materials, finish, capacity and features are set to your requirement.

Prices are tentative and for guidance only. They are not an offer and not a final price.

Costs move with the world. Pricing depends heavily on international raw material prices and the USD to INR exchange rate. In the present geopolitical climate, freight, labour charges, the cost of living and taxes are all changing quickly, and prices change with them.

A firm price comes in writing. JumpKing issues a binding quotation only after understanding your full requirement: size, shape, quality, safety standards, location, budget, complexity and time frame.

Taxes as applicable on the date of supply. GST and any other taxes are charged at the rates in force when the goods and services are supplied.

Supplied by specialist manufacturers. JumpKing plans, designs and delivers. Photos, drawings and specifications are indicative; warranty is as per the manufacturer's terms.

09 CONTACT

TALK TO JUMPKING

Share your site, budget and timeline, and receive a written quotation with size, layout and price. Turnkey projects start at ₹2 Cr.

WHATSAPP	+91 82968 26263 · messages only
EMAIL	hello@jumpkingindia.com
OFFICE	45, Royal Enclave, Jakkur, Bangalore 560064
HOURS	Mon to Sat, 12:30 to 20:00

Scan for the live page, latest photos and price.

jumpking.in/shop/tunnel-aquarium

JK-33530 · 4 NOV 2026