RIDES

HURRICANE BULL

Mechanical rodeo bull with inflatable bed • 16 ft

STARTING PRICE

From ₹7,20,000

Tentative • taxes as applicable

EIGHT SECONDS IS A LONG TIME.

A rodeo bull is the easiest crowd you will ever draw. Every ride is a show and every fall is a soft one.

16 ft INFLATABLE BED	1 rider AT A TIME
1 operator PER RIDE	18% GST APPLICABLE

02 AT A GLANCE

SPECIFICATIONS

Bed size	16 ft
Control	Operator controller, variable speed
Kit	Air pump, repair kit, inflatable bed, controller
HSN	95089000

03 TECHNICAL DRAWING

SIZE AND LAYOUT

4.9 m

DIAMETER

1.5 m

HEIGHT

19 m^2

FOOTPRINT

A ISOMETRIC MM

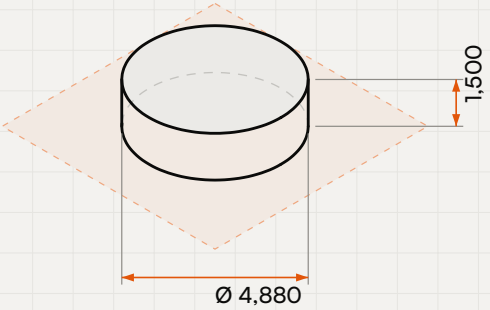

B FRONT ELEVATION MM

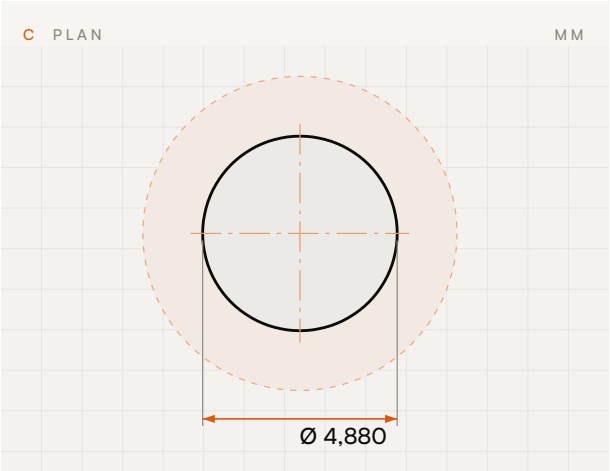

KEY DIMENSIONS

Diameter	4,880 mm
Height	1,500 mm
Floor area	19 m^2
Clear zone	1,500 mm all round
Site needed	7.9 × 7.9 m, 62 m^2

DRAWING	UNITS
JK-D-344 • Rev A	mm
SCALE	**PROJECTION**
Not to scale	Third angle

Indicative drawing for planning. Sizes, materials and layout are confirmed in the written quotation.

04 FEATURES

WHY IT WORKS

01 **Operator control**

Speed and buck set from the controller.

02 **Inflatable bed**

A soft landing all the way round.

03 **All ages**

Gentle for first-timers, wild for the brave.

04 **Crowd magnet**

Every ride is a show.

05 PLANNING

SITE REQUIREMENTS

Level ground

Flat grass, turf or matting, free of stones and sharp objects, with a clear safety margin all round.

YOU SUPPLY

Power

A dedicated, RCD protected socket within reach of the blower and controls.

YOU SUPPLY

Setup crew

People to unroll, anchor, inflate and pack down at each event.

YOU, OR TECHNICIANS AT A QUOTED CHARGE

Trained attendant

One attendant on every session for the briefing, rules and safe numbers.

TRAINING BY SPECIALISTS, QUOTED

06 COMMERCIAL

PRICE AND TERMS

STARTING PRICE

From ₹7,20,000

Tentative price for the standard configuration. The real quote is given after we understand the quality, quantity, size, materials, location, budget and current material prices.

GST	18%, extra
Installation	DIY, or by technicians at a quoted charge

Shipping	Extra, at actual
Warranty	As per the manufacturer's terms
Payment	As per the written quotation
Price valid	Confirmed in the quotation

07 PROCESS

HOW IT WORKS

01 **Brief**

Venue, footfall and the riders you expect.

02 **Quote**

Model, bed size, branding and controller options confirmed.

03 **Supply**

Machine and bed checked, packed and shipped at actual.

04 **Set up and train**

Many venues set up themselves with the setup guide; installation and operator training by technicians are quoted separately.

08 PLEASE NOTE

ABOUT OUR PRICES

Made to your brief. Most of the range, and every project item, is fully customisable: size, shape, materials, finish, capacity and features are set to your requirement.

Prices are tentative and for guidance only. They are not an offer and not a final price.

Costs move with the world. Pricing depends heavily on international raw material prices and the USD to INR exchange rate. In the present geopolitical climate, freight, labour charges, the cost of living and taxes are all changing quickly, and prices change with them.

A firm price comes in writing. JumpKing issues a binding quotation only after understanding your full requirement: size, shape, quality, safety standards, location, budget, complexity and time frame.

Taxes as applicable on the date of supply. GST and any other taxes are charged at the rates in force when the goods and services are supplied.

Supplied by specialist manufacturers. JumpKing plans, designs and delivers. Photos, drawings and specifications are indicative; warranty is as per the manufacturer's terms.

JUMPKING

09 CONTACT

TALK TO JUMPKING

Share your site, budget and timeline, and receive a written quotation with size, layout and price. Turnkey projects start at ₹2 Cr.

WHATSAPP	+91 82968 26263 · messages only
EMAIL	hello@jumpkingindia.com
OFFICE	45, Royal Enclave, Jakkur, Bangalore 560064
HOURS	Mon to Sat, 12:30 to 20:00

Scan for the live page, latest photos and price.

jumpking.in/shop/hurricane-bull

JK-344 · 23 OCT 2026